RevNo	Revision note	Date	Signature	Checked

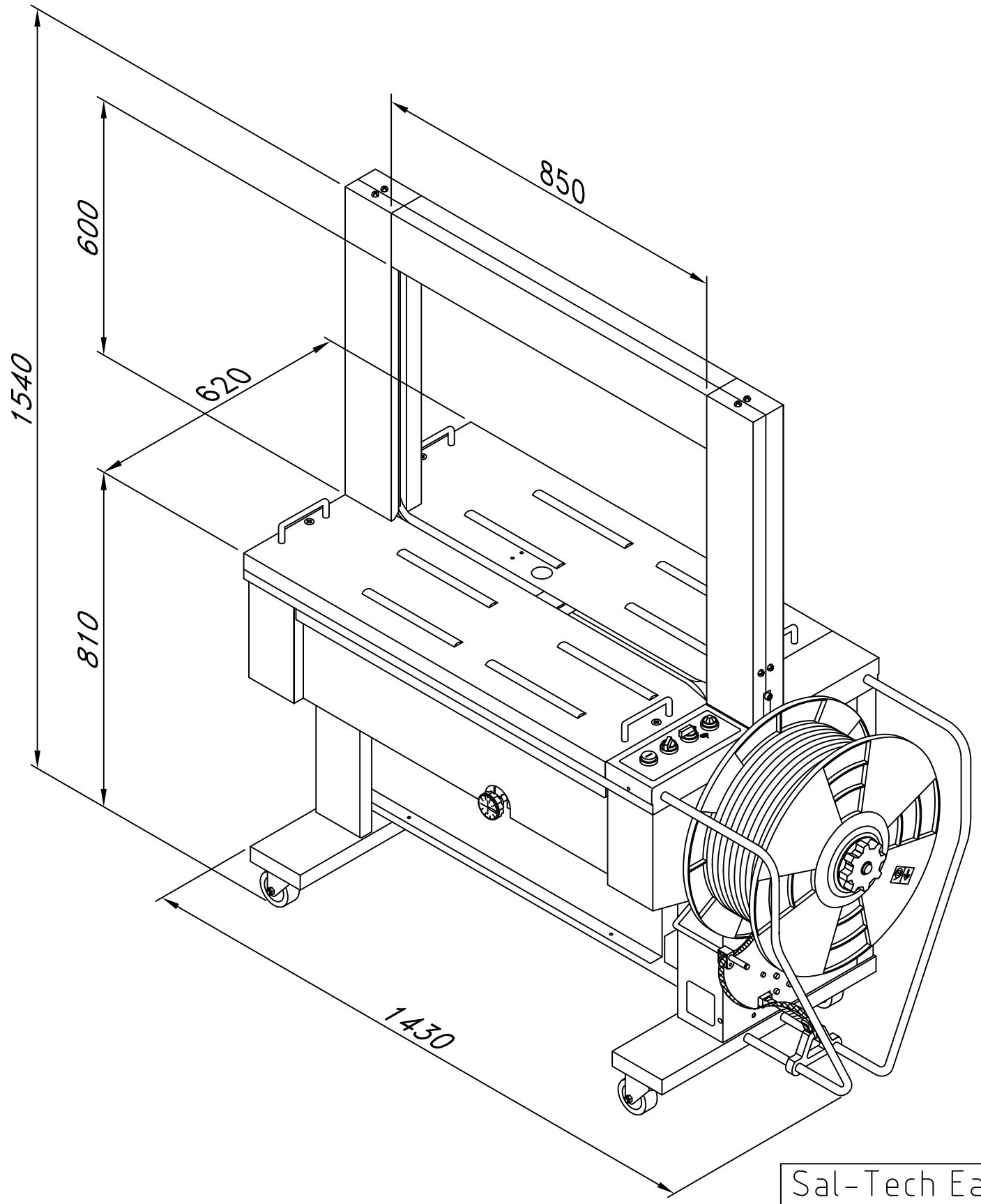

Sal-Tech Easy Packaging
Salbæk Technology Denmark
Tel.: +45-7027 2220
www.sal-tech.com
support@sal-tech.com

Not to scale

STEP TP-6000CE1

This document is Sal-Tech property and without Sal-Tech´s written consent it is not to be disclosed, reproduced in whole or in part or used for manufacture for anyone but Sal-Tech.

Edition	Date	Name/Aprov
A	230119	ELA/GUS

AUTOMATIC STRAPPING MACHINE
FOR NARROW STRAP

41100342 - JC 3361