| RevNo | Revision note | Date | Signature | Checked |
|---|---|---|---|---|

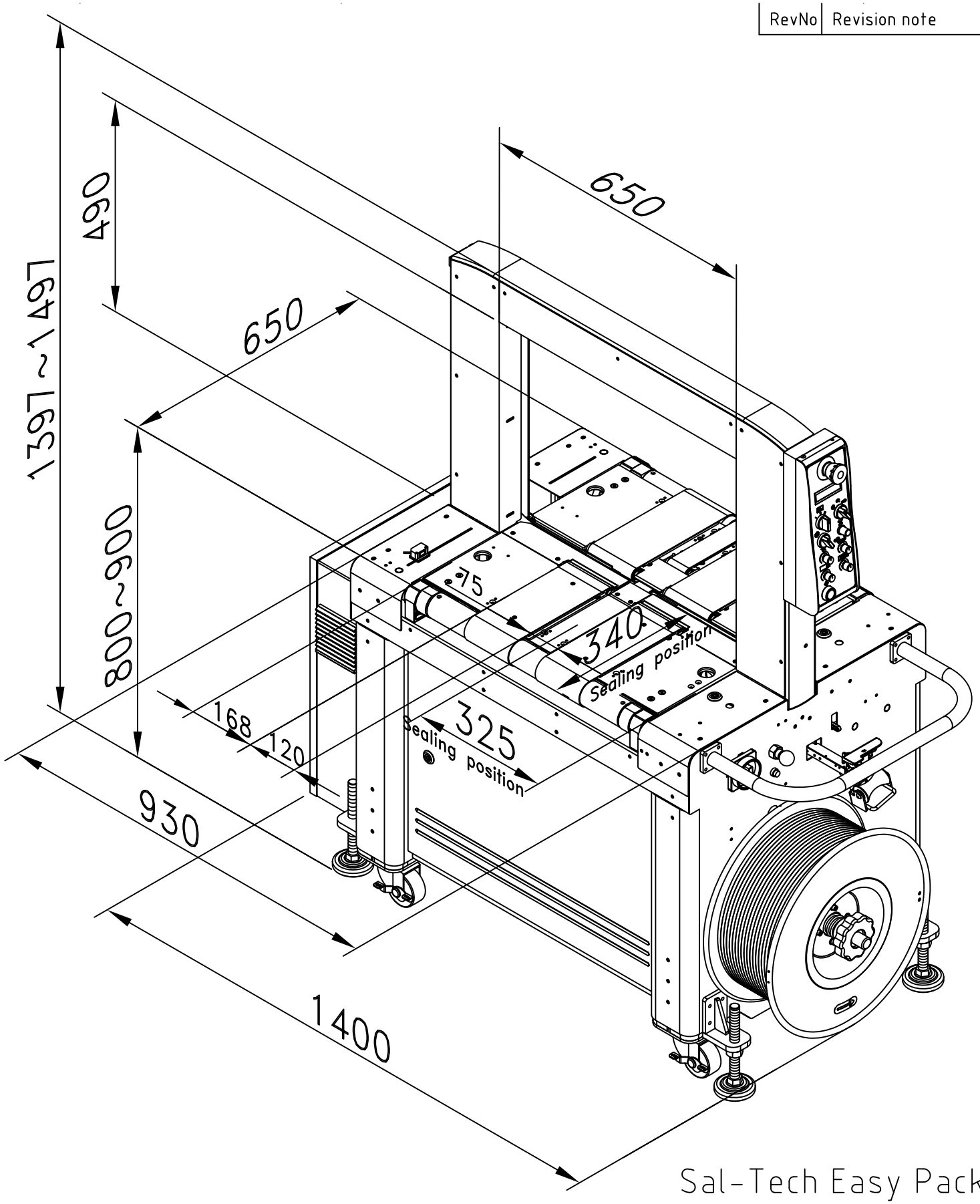


Sal-Tech Easy Packagin

Not to scale

STEP TP-702B

FULLY AUTOMATIC STRAPPING MACHINE

This document is Sal-Tech property and without Sal-Tech´s written consent it is not to be disclosed, reproduced in whole or in part or used for manufacture for anyone but Sal-Tech.

| Edition | Date | Name/Aprov |
|---|---|---|
| A | 250219 | ELA/GUS |
| | | |
| | | |
| | | |

41167010- JC 3361

Page 1/1

Page